BONALDO

Art, Art Wood

Designer: Gino Carollo



The base of the Art table is its most distinguishing feature: it is made of a metal trapezium that runs diagonally under the table top, allowing minimum obstruction and optimising the space.
Overall, the load-bearing structure designed in this way stands out for its high levels of dynamism, solidity and sculptural impact. The top is firmly supported but the final effect is one of great lightness. The base of Art, a modern extendable table, is in painted metal of various colours; the table top in the fixed (rectangular, round or rectangular with rounded corners) or leaf version is available in different materials: this versatility makes it equally suitable for dining room or study. The Art table takes on new life in its version with a wooden base ("Art Wood").





Data sheet

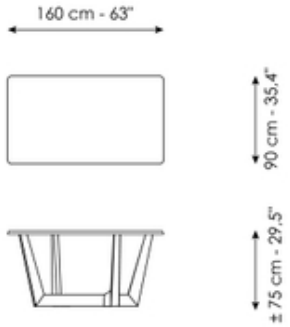

Width: 160cm
Depth: 90cm
Height: ± 75cm

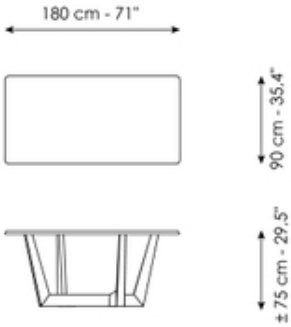

Width: 180cm
Depth: 90cm
Height: ± 75cm

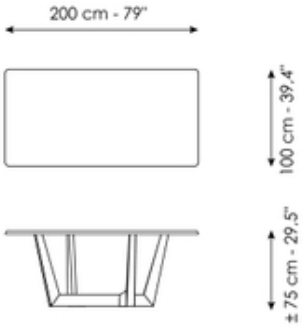

Width: 200cm
Depth: 100cm
Height: ± 75cm

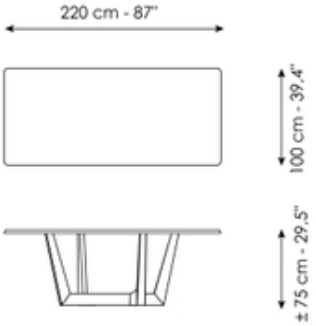

Width: 220cm
Depth: 100cm
Height: ± 75cm

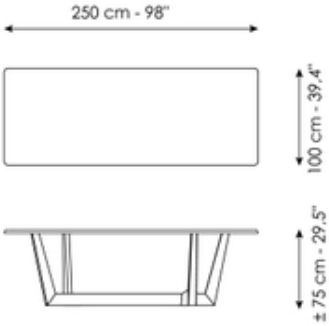

Width: 250cm
Depth: 100cm
Height: ± 75cm

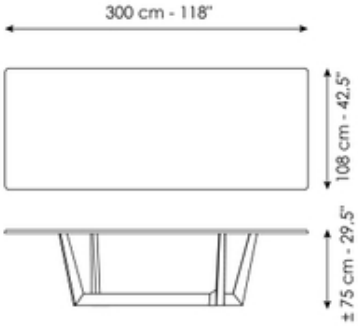

Width: 300cm
Depth: 108cm
Height: ± 75cm

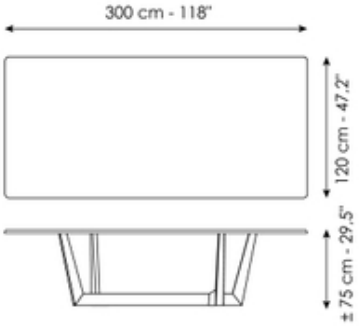

Width: 300cm
Depth: 120cm
Height: ± 75cm

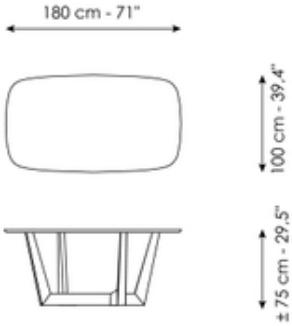

Width: 180cm
Depth: 100cm
Height: ± 75cm

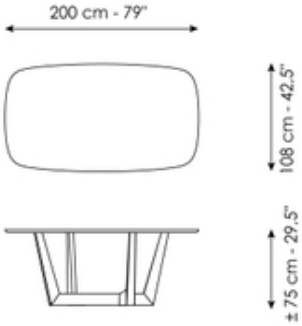

Width: 200cm
Depth: 108cm
Height: ± 75cm

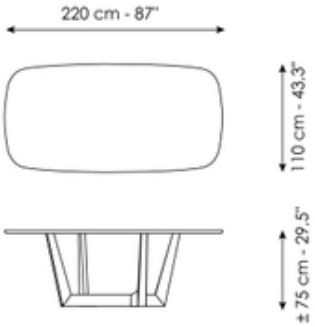

Width: 220cm
Depth: 110cm
Height: ± 75cm

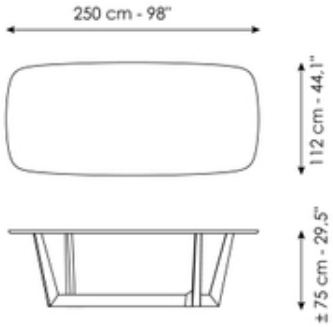

Width: 250cm
Depth: 112cm
Height: ± 75cm

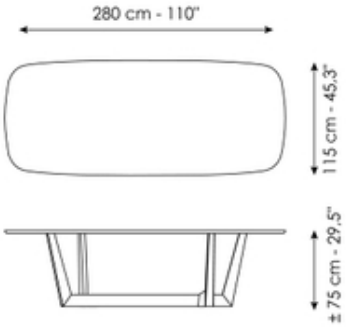

Width: 280cm
Depth: 115cm
Height: ± 75cm

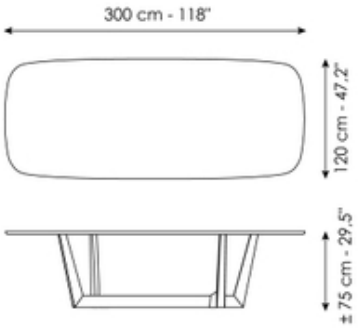

Width: 300cm
Depth: 120cm
Height: ± 75cm

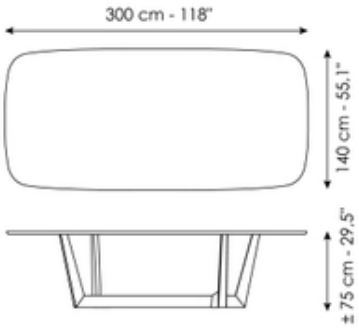

Width: 300cm
Depth: 140cm
Height: ± 75cm

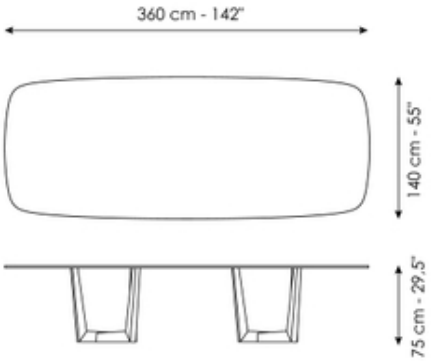

Width: 360cm
Depth: 140cm
Height: 75cm

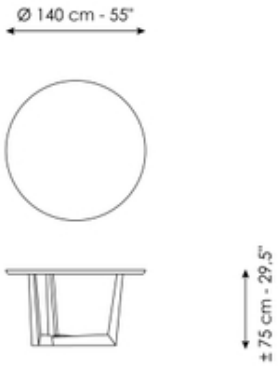

Width: 140cm
Depth: 140cm
Height: ± 75cm

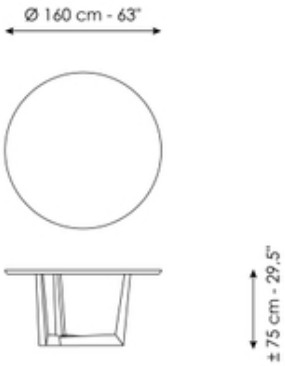

Width: 160cm
Depth: 160cm
Height: ± 75cm

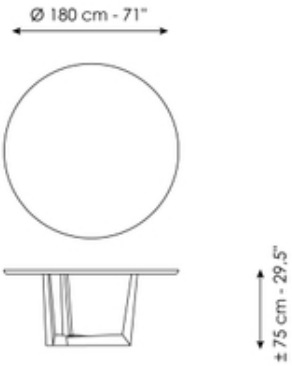

Width: 180cm
Depth: 180cm
Height: ± 75cm

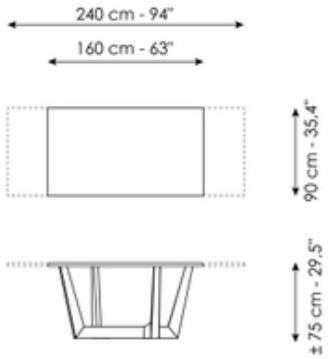

Width: 160/240cm
Depth: 90cm
Height: ± 75cm

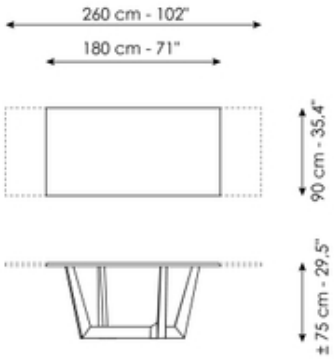

Width: 180/260cm
Depth: 90cm
Height: ± 75cm

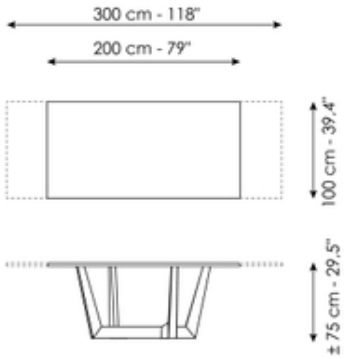

Width: 200/300cm
Depth: 100cm
Height: ± 75cm

Finishes

Art - Top

Rectangular top



Veneered wood
Walnut Canaletto



Veneered wood
Brushed coal oak



Veneered wood
Brushed natural oak



Wood with natural edges
American walnut



Solid wood
American walnut



Solid wood
Brushed natural oak



Solid wood
Brushed Grey oak



Veneered wood
Brushed Grey oak

Mat ceramic
Iridium white



Mat ceramic
Graphite grey

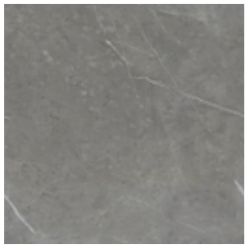

Mat ceramic
Ardesia grey



Mat ceramic
Laurent

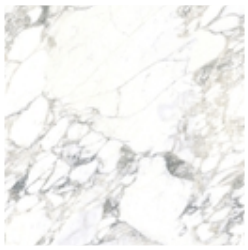

Glossy ceramic
Calacatta



Silk finish ceramic
Calacatta macchia vecchia

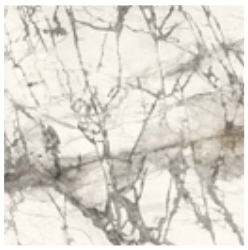

Glossy ceramic
Imperial grey

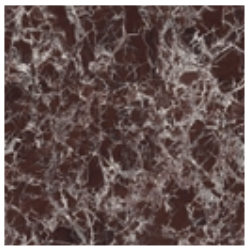

Glossy ceramic
Rosso imperiale



Glossy ceramic
Mountain peak

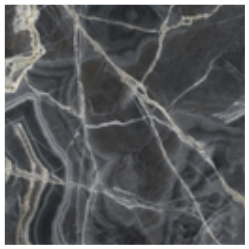

Glossy ceramic
Black Onyx

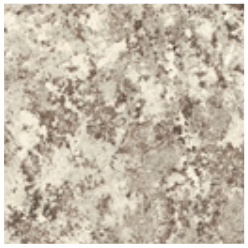

Mat ceramic
Alaska White



Mat ceramic
Augusta

Art - Top

Barrel-shaped top



Veneered wood
Walnut Canaletto



Solid wood
Natural oak



Solid wood
American walnut



Solid wood
Brushed Grey oak

Glass
Transparent



Glass
Bronzed



Glass
Smoked

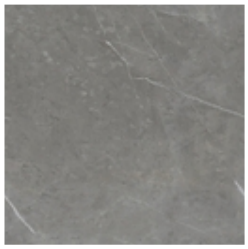

Mat ceramic
Ardesia grey



Mat ceramic
Laurent



Glossy ceramic
Calacatta



Silk finish ceramic
Calacatta macchia vecchia

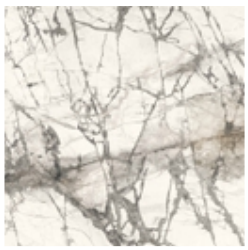

Glossy ceramic
Imperial grey

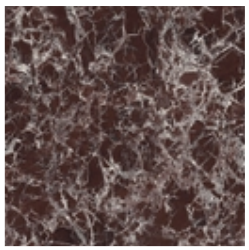

Glossy ceramic
Rosso imperiale

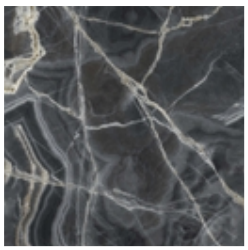

Glossy ceramic
Black Onyx



Glossy ceramic
Mountain peak

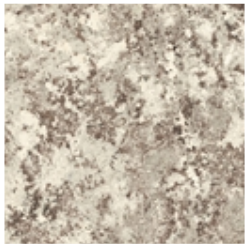

Mat ceramic
Alaska White



Mat ceramic
Augusta

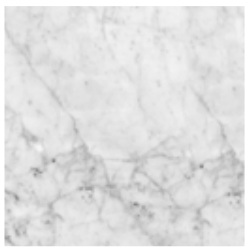

Marble
Carrara

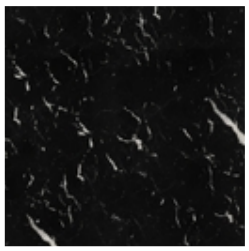

Marble
Marquinia

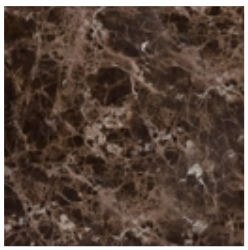

Marble
Emperador

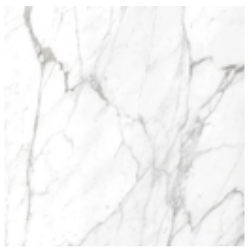

Marble
Calacatta



Marble
Rosso Carpazi

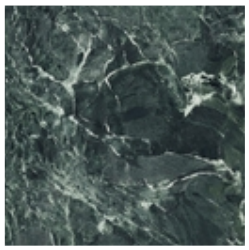

Marble
Saint Denis



Marble
Fior di bosco

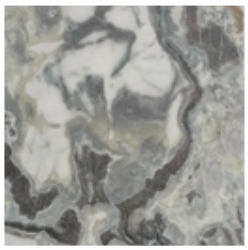

Marble
Dover White



Marble
Travertino Romano

Art - Top

Round top

Glass
Transparent



Glass
Bronzed



Glass
Smoked

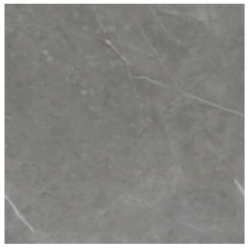

Mat ceramic
Ardesia grey



Mat ceramic
Laurent



Glossy ceramic
Calacatta



Silk finish ceramic
Calacatta macchia vecchia

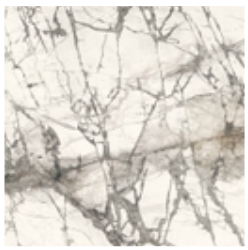

Glossy ceramic
Imperial grey

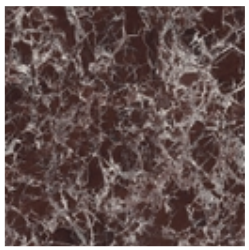

Glossy ceramic
Rosso imperiale

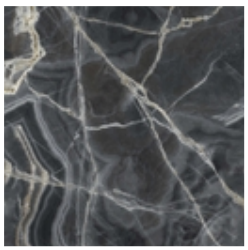

Glossy ceramic
Black Onyx



Glossy ceramic
Mountain peak

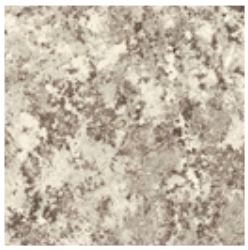

Mat ceramic
Alaska White



Mat ceramic
Augusta

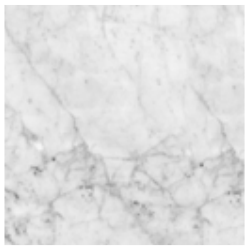

Marble
Carrara

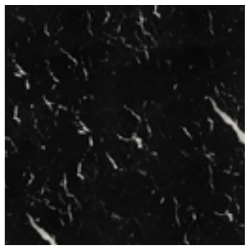

Marble
Marquinia

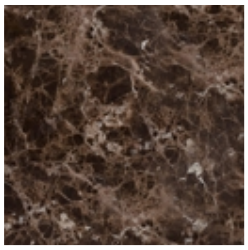

Marble
Emperador

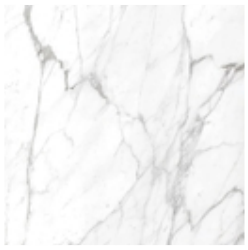

Marble
Calacatta



Marble
Rosso Carpazi

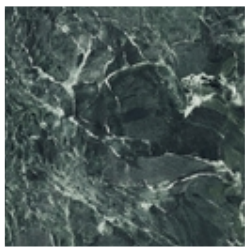

Marble
Saint Denis



Marble
Fior di bosco

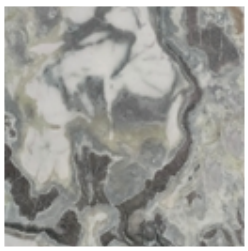

Marble
Dover White



Solid wood
American walnut



Solid wood
Brushed natural oak



Solid wood
Brushed Grey oak

Art - Top

Leaf table top



Veneered wood
Walnut Canaletto



Veneered wood
Brushed coal oak



Veneered wood
Brushed Grey oak

Mat ceramic
Iridium white



Mat ceramic
Graphite grey

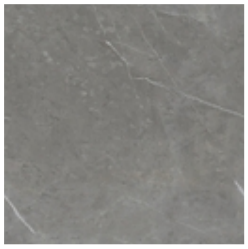

Mat ceramic
Ardesia grey



Mat ceramic
Laurent



Glossy ceramic
Calacatta



Silk finish ceramic
Calacatta macchia vecchia

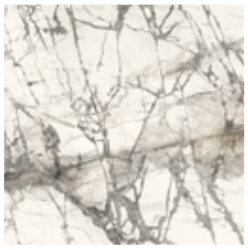

Glossy ceramic
Imperial grey

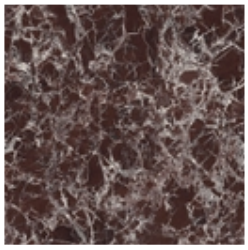

Glossy ceramic
Rosso imperiale

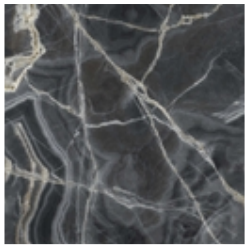

Glossy ceramic
Black Onyx



Glossy ceramic
Mountain peak

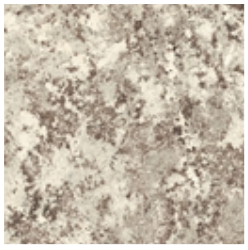

Mat ceramic
Alaska White



Mat ceramic
Augusta

Art Wood - Top

Barrel-shaped top



Glass
Bronzed



Glass
Smoked

Glass
Transparent

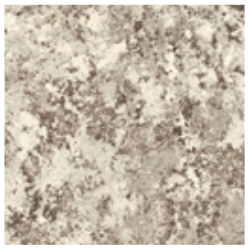

Mat ceramic
Alaska White

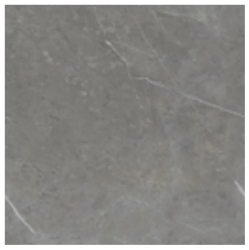

Mat ceramic
Ardesia grey



Mat ceramic
Augusta

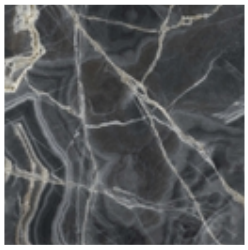

Glossy ceramic
Black Onyx



Glossy ceramic
Calacatta



Silk finish ceramic
Calacatta macchia vecchia

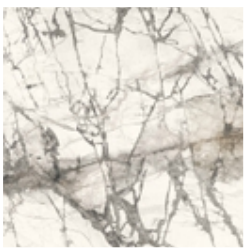

Glossy ceramic
Imperial grey



Mat ceramic
Laurent



Glossy ceramic
Mountain peak

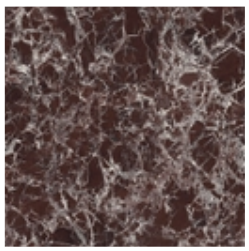

Glossy ceramic
Rosso imperiale

Art Wood - Top

Round top



Glass
Bronzed



Glass
Smoked

Glass
Transparent

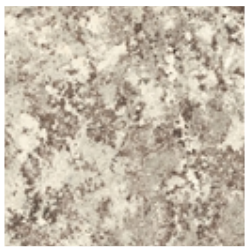

Mat ceramic
Alaska White

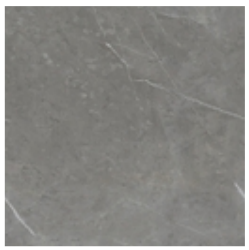

Mat ceramic
Ardesia grey



Mat ceramic
Augusta

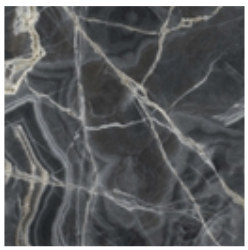

Glossy ceramic
Black Onyx

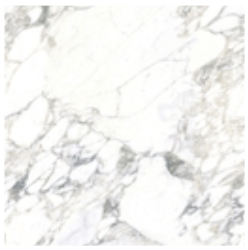

Glossy ceramic
Calacatta



Silk finish ceramic
Calacatta macchia vecchia

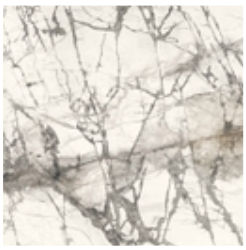

Glossy ceramic
Imperial grey



Mat ceramic
Laurent



Glossy ceramic
Mountain peak

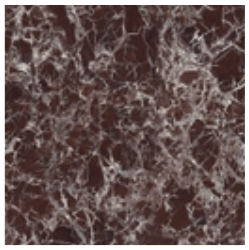

Glossy ceramic
Rosso imperiale

Art 360 / Art Wood 360 - Top

Barrel-shaped top

Glass
Transparent

Base

Art

Painted metal
Mat white



Painted metal
Supreme anthracite



Painted metal
Mat brown

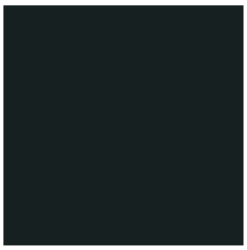

Painted metal
Mat black



Painted metal
Mat dove grey



Painted metal
Mat bronze



Painted metal
Mat lead



Painted metal
Mat pearl gold



Painted metal
Mat brass



Painted metal
Mat copper



Metal finish
Brown nickel



Metal finish
Dark nickel



Metal finish
Clouded chrome

Base

Art Wood



Solid wood

American walnut

Materials, fabrics, leathers, colors and finishes are approximate and may slightly differ from actual ones. You can find the complete collection of Bonaldo fabrics and leathers on the website https://bonaldo.biz